Your low EMF Home Articles

Your low EMF Home set of articles is separated into 9 sections, each of which can be individually downloaded. It is a 'work in progress' incorporating new information whenever time permits.

Section 1

House wiring and EMFs; July 2007 SAGE report

1. House wiring and EMFs; introduction; what are normal EMFs? Choosing a consumer unit; electric fields; cables; demand switches; external 'faults' in the supply that can cause high magnetic fields; Wiring in homes - SAGE report July 2007

2. Dirty electricity (DE) – What is dirty electricity? What effect does it have? What sort of levels are you likely to have? What you can do if you have high levels of DE; DE coming into the house; DE generated within the house; dLAN caution

3. Lighting and EMFs; Bulbs, incandescent, energy-saving, fluorescent, halogen, full-spectrum light, daylight, light emitting diode (LED); anglepoise lamps and other metal framed lamps, halogen desk lamps, bedside/bedhead lights, spotlights, standard lamps and table lamps, nightlights; light wiring; light switches, dimmer switches; Physiological effects of blue and red lights; circadian rhythms, melatonin, light and illness, timing of blue lights, timing of red/amber lights

4. Smart meters – What is it all about? Smart Grid; Remote reading meters; Smart meters; Wide Area Network (WAN) technologies; Home Area Network (HAN); RF exposures from Smart Meters; Experiences of smart meters in other countries; Solar storms may affect smart meters

5. WiFi general – cancer; diabetes; DNA; electrical hypersensitivity; eyes; heart; heat shock proteins; immune system defects; neurodegenerative diseases; neurological effects; plant effects; reproductive effects; skin effects and WiFi technical – WiMAX; Wireless Myths 1) We've been exposed to this radiation for years, it must be safe 2) People only got affected when the scare stories started, it must be psychosomatic 3) Being on a phone for 20 minutes is equivalent to 1 year in a WiFi classroom 4) The WHO factsheet says there is no cause for concern, and they should know; Technical Information for Different Protocols

6. Underfloor heating

7. Microwaves, windows & Pilkington K glass – the glass; frames; ventilation

8. Intermediate frequency sources – CFLs; solar-power invertors; a result of DE; electronic article surveillance systems

9. References – 131 References

House Wiring and EMFs

Introduction *(please also read the legal and safety 'Notes' on page 12)*

Electric and magnetic fields (EMFs) are produced as a result of the flow of electric current. The wiring in our houses, the electric appliances and lights we use, all produce EMFs. EMFs can be measured using an appropriate meter (for details see end of this article add comment).

Meters that measure both electric and magnetic fields can be hired or bought from EMFields http://www.emfields-solutions.com/detectors/overview.asp

At mains-frequency, the magnetic fields and the electric fields need to be considered separately, and there are different safety guidelines for each. At high frequencies, such as those used for telecommunications, magnetic and electric fields are so linked they are usually considered together as "electromagnetic radiation". 'Frequency' means the number of vibrations per second, so 'high frequency' means more vibrations per second.

In our homes we are surrounded by EMFs, both from the house wiring and from the appliances which use the electricity supply. This article is about fields from the house wiring. The three illustrations below show examples of EMFs in the home from a lamp and a transformer. The electric and magnetic fields are similar to those produced by house wiring.

Switched off

This picture shows electric fields from sockets and from the wire to the lamp, even though the light is not switched on. These electric fields are present all the time electricity is present in the wires, even if it is not actually being used.

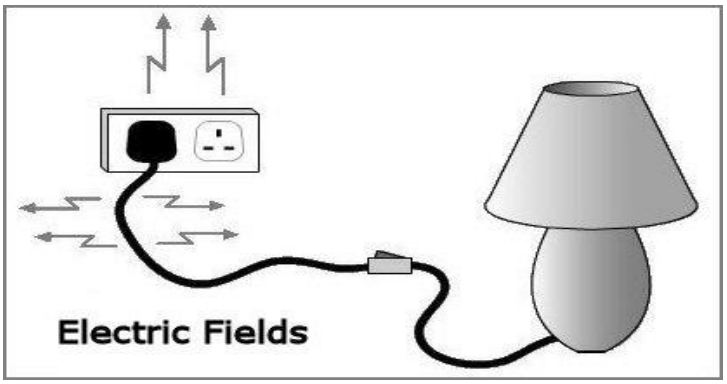

Switched on

This picture shows the electric and magnetic fields from the lamp when it is switched on. The electric fields now extend to the lamp. Magnetic fields are also being produced by the current flowing along the wire and light bulb – although these usually reduce quickly as you get further away.

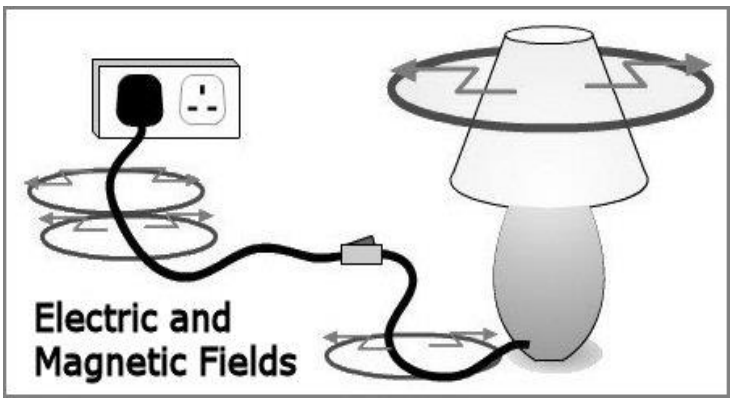

At the socket

This illustration shows a common type of mains-adapter transformer that converts the 230 volt mains electricity to a lower voltage needed for many, usually portable, electronic devices. Once again, both electric and magnetic fields are emitted. The magnetic fields are considerable and can still be high up to half a metre away from the transformer. Sometimes transformers are built into radios and music players and are actively emitting magnetic fields all the time the player is plugged into the mains, even when it is not actually in use.

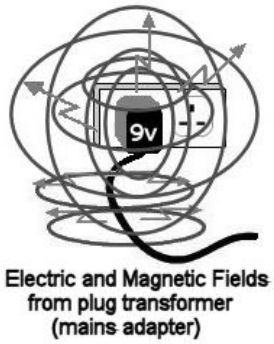

Electric and Magnetic Fields from plug transformer (mains adapter)

A magnetic field is produced whenever an electrical current flows. The larger the current, the higher the magnetic field produced. A mains electricity electrical circuit effectively starts and ends at the local electricity substation transformer. The supply from the substation feeds the building's electricity meter, main switch, consumer unit ("fuse box") and final circuits. If the outward and return currents are be equal and flow in the same cable (wire bundle), as they should be, then the magnetic fields produced in the house rooms should be negligible.

What are normal EMFs?

The magnetic fields in the house, with the electricity switched off, should be as low as possible and are usually less than the UK average of 0.04 microtesla (µT). For detached houses set back from the road, the average field from outside sources is about 0.02 µT. For flats and for terraced houses right up to the pavement have higher fields, however if they are about about 0.1 µT then an external electrical supply fault should be suspected.

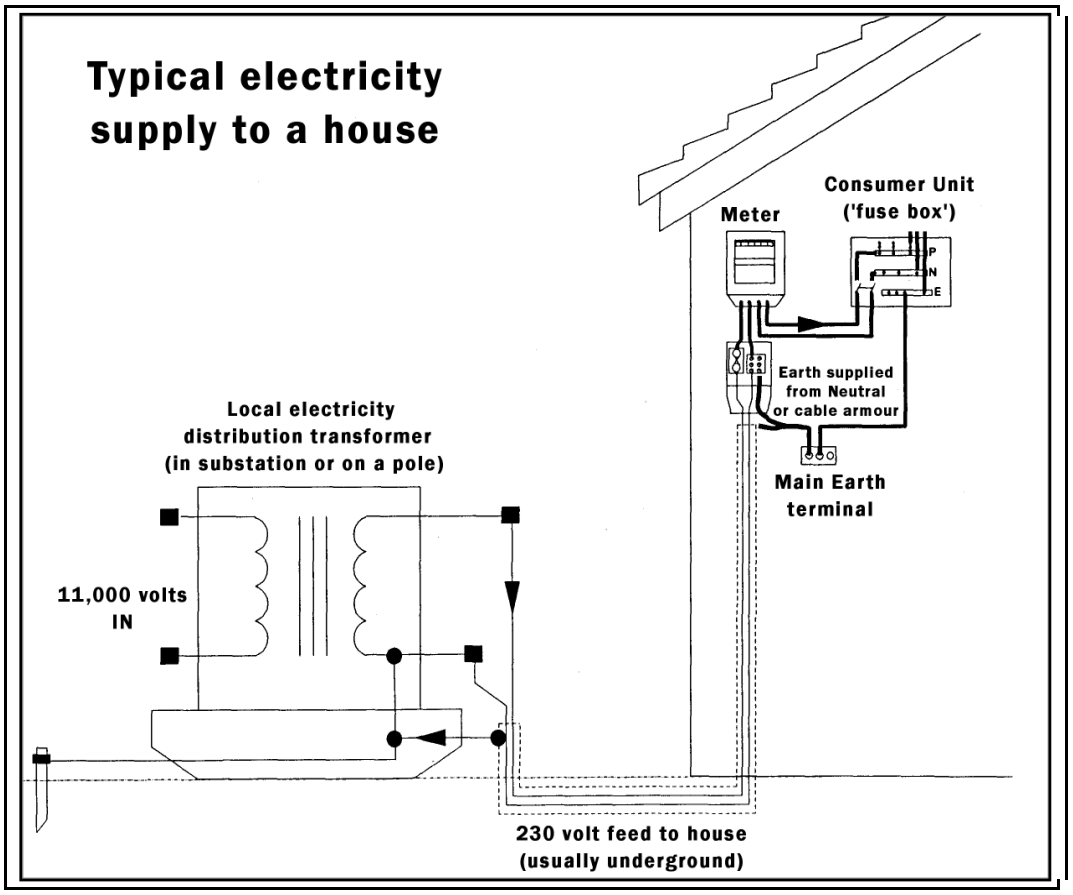

External 'faults' are caused by many things, but the commonest are Neutral and Earth currents flowing in the wrong conductors and in metal water and gas pipes. When all "go" and "return" currents travel together in the same cable, or bundle of cables, then magnetic fields fall off very rapidly as you move away from the cables. If they don't run together then much higher than usual magnetic fields can extend over wide areas. There is little that you can do to reduce such fields other than pester your local electricity distributor to investigate them and, hopefully, correct the worst faults. See "External Net Currents" later in this document for more technical information about this.

In most cases, a cable supplying 230 volts single-phase power will have three conductors; phase and neutral conductors providing the outward and return paths for the current and a safety (protective) earth conductor. The protective conductor usually carries virtually no current except under fault conditions, although some small currents are to be expected from capacitive circuit devices. The protective earth conductor is there to provide an alternative path back to the source for the electricity if a fault to earth occurs. This conductor is usually an uninsulated wire in normal circuit cables but is fitted with green and yellow (or just green on older cables) plastic sleeving at its ends.

The Neutral conductor is connected to earth at the local electricity substation (and sometimes elsewhere, too, under "protective multiple earthing" [PME] schemes) and is used to carry the returning current. This wire is now coloured blue in the UK (compulsory by April 2006 for new installations). It used to be black, which is the colour that will be still be found in most building wiring (installed in 2005 and earlier).

The third wire is the "Live", "Line" or "Phase" conductor and this has the electric pressure (i.e. the voltage) on it and it is the source of the current used to power electrical equipment. This wire now has brown insulation in the UK (compulsory since April 2006 for new installations). It used to be red, which is the colour that will be still be found in most building wiring (installed in 2005 and earlier).

The easiest way for an electrician to check the circuits for current flows is by using a clamp-ammeter around the cable. Although this is best done around the Phase/Line and Neutral conductors only, this is not always easy to do. However, in practice, a very good indication is usually obtained by using the clamp-meter around the whole (twin & earth) cable. This is because discontinuities in Line or Neutral will still show up and also any leakage to earth rarely stays in that specific earth conductor. The clamp-meter reading should rarely show more than 0.01 A (10 mA), even when the circuit is loaded using a high load such as an electric kettle or a 3 kW fan heater. If it does, then there is a wiring fault which will be causing elevated magnetic fields.

Final "ring" circuits usually feed the socket-outlets in UK homes. These "rings" of cable always give rise to higher magnetic fields than simple "radial" or "tree and branch" wiring. A tree or radial circuit forces the return current to travel back down the same piece of cable. A "ring" final circuit is not required, but is recognised, in BS7671 (IEE/IET Wiring Regulations) and is what most electricians traditionally install. They were originally introduced after the second World War in order to minimise the use of copper wire while at the same time allowing for a number of electrical heaters, etc, to be used at the same time.

In a "ring" final circuit, the wires are laid out in a circle (more or less), starting and finishing at the consumer unit (fuse box). This means that current used from a socket-outlet has two possible ways to flow to and from the consumer unit. Currents may not flow equally both ways around

the ring, so the magnetic fields produced may not cancel, and the cables then radiate these higher magnetic fields into the room and the adjacent rooms.

At every socket-outlet two cables are joined. A small difference in the impedance back each way to the consumer unit around the loop will cause a problem almost as bad as a poor connection.

A final "ring" circuit is usually protected against overload current above 30/32 amps, while the cable is nominally rated at only 20 amps. Multiple "plug-in" electric heaters are other "plug-in" high amperage loads are now rarely used and it is now most unlikely for the total load on a ring circuit in a house to exceed 20 amps, meaning that a radial circuit with a 20 amp circuit-breaker can be used instead in most areas, except in a kitchen where higher loads are more often used.

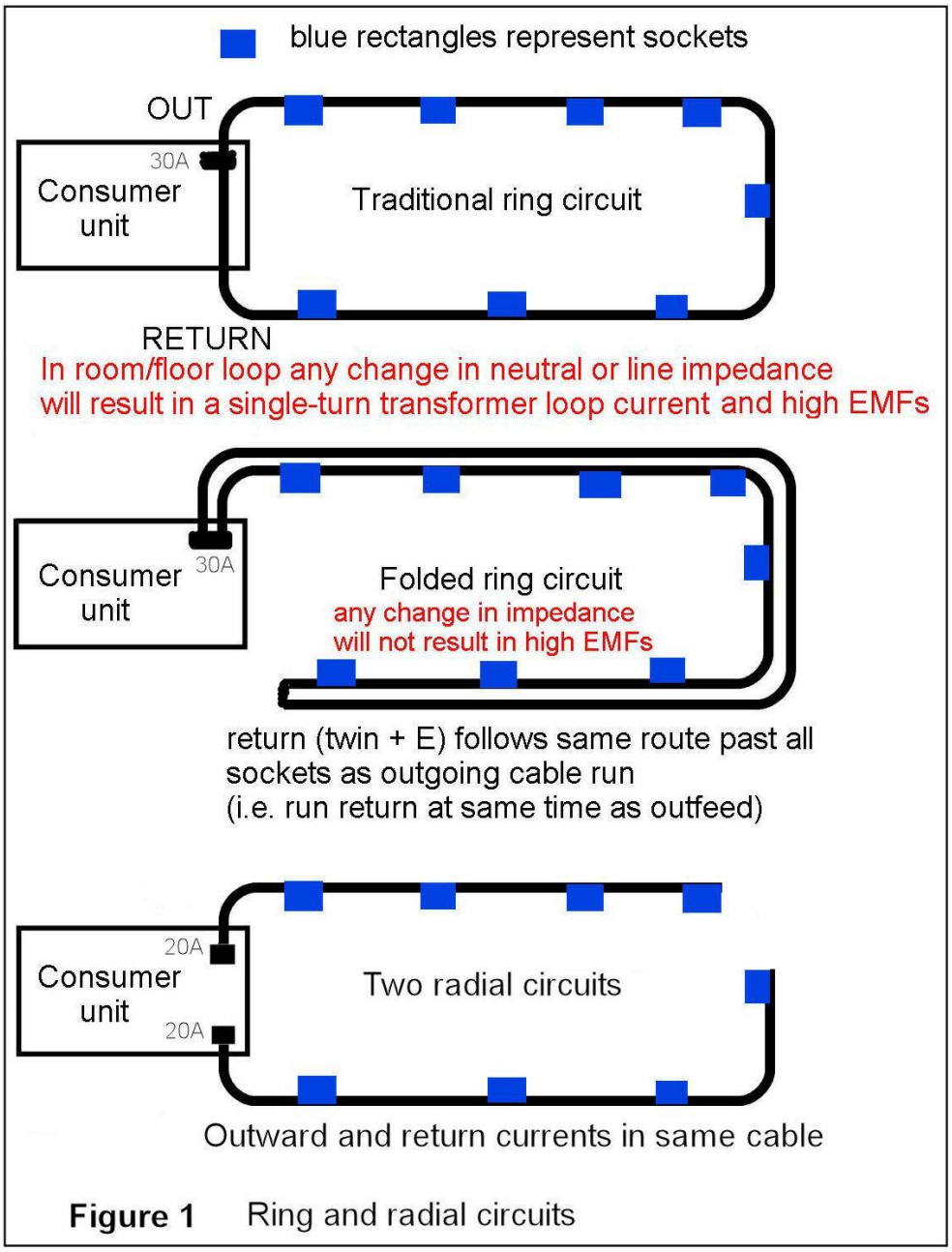

Figure 1 Ring and radial circuits

A circuit can pass the required BS7671 tests but can still have a poor ratio of resistance between different sections of the circuit, leading to unnecessarily high magnetic fields. BS7671 requires

ring circuits to be tested by cross connecting line and neutral to form a figure of 8 loop and then resistance readings taken between phase and neutral at each socket, which should be substantially the same. This may detect the asymmetry in resistance that is the problem here, but a ratio of 0.1 to 0.01 ohms will cause a 10:1 split in current flow, hence elevated magnetic fields, as surely as a ratio of 1 to 0.1 ohms.

In the worst case, which is surprisingly common, a Line or Neutral actually gets disconnected (often as a result of incompetent DIY) and this effectively results in a single-turn transformer loop. When a significant load is applied, the magnetic field in rooms throughout the inside of the ring can rise to many microtesla.

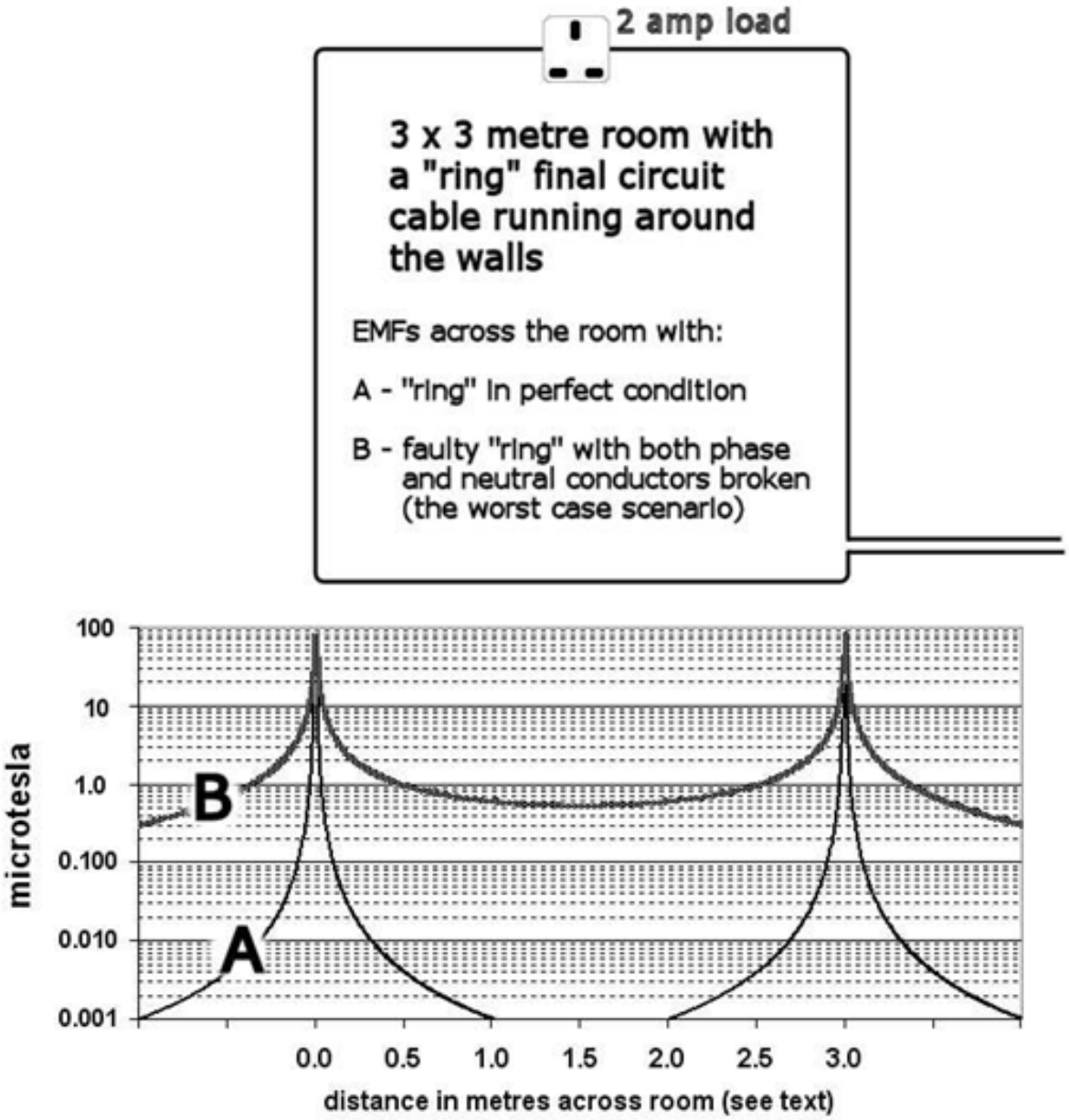

Comment:

For situation 'B' ~ this is with phase and neutral broken towards opposite ends of the ring. For only one broken ring conductor, the EMF levels will somewhere between the levels shown as A (perfect condition) and B.

Choosing a consumer unit

The consumer unit is the "fuse box" which goes between the electricity meter and all the electrical circuits in the house. Modern units do not contain fuses, but miniature mechanical circuit breakers (MCBs) which have replaced them. They often also contain an extra protective device called a residual current device RCD, which replaces the isolator switch. Modern consumer units can also contain other devices such as time switches and door-bell transformers. In order to keep the electric fields in the house low, we recommend a metal consumer unit (the cheaper ones, often used, are plastic and provide no electric field shielding). We also recommend the use of screened wire for the same reason - see the section on "Minimising Electric Fields".

The purpose of the MCB is to protect the wiring of its circuit from excessive current due to an overload or short-circuit - in a similar but more controlled way than a wire fuse did. If the rated current is exceeded, the MCB will trip, and merely needs to be switched back on again to re-connect. It is more convenient than a fuse, and it is more obvious to see which one has tripped after a fault occurs. Common values are 6A or 10A for lighting circuits, 16A or 20A for radial power socket circuits and immersion heaters, 32A for ring mains, 7kW electric showers and electric cookers, and 40A or 50A for 8kW and larger ones.

RCDs (sometimes wrongly called Earth Leakage Circuit Breakers - see below) are primarily designed to protect against electrocution (death from electric shock) by detecting unbalanced current flows. The RCD monitors the balance of the Neutral and Phase currents and disconnects the circuit if any out-of-balance current reaches a pre-set limit. Because under normal circumstances there should be very little earth current, they can be made very sensitive: 30 milliamps (0.03 A) is common, with 100 mA (0.1 A) for circuits with motors and higher current switched loads.

In some cases, the RCD does not protect all the circuits, in which case there is also an overall isolator switch to disconnect everything. This type of arrangement is called a "split load" consumer unit. Under the latest (2008) 17th Edition UK Wiring Regulations (BS 7671) many more circuits are required to be protected by a 30 mA RCD and some consumer boxes now have two split multi-MCB circuit groups each of which is protected by an RCD. It is normal to feed a freezer from an unprotected circuit so that in the event of a trip while the house is unoccupied, it will continue to function. Garages and outhouses are also often fed in this way if they have their own RCD, so that the main house RCD will not trip in the event of a fault. RCDs do not protect against overloads so must always be used in conjunction with MCBs.

An RCD usually protects several circuits, any one developing a fault will result in them all being disconnected. It can be better to use an RCBO (a combined MCB and RCB) for each circuit, though these are significantly more expensive and physically larger at the present time. Some advanced RCDs/RCBOs have extra features, such as detection of live/neutral reversal or earth disconnection (for which they need an earth sense wire).

RCDs are current operated, but there is also an older voltage operated Earth Leakage Circuit Breaker (ELCB). There is some confusion over these names. They sense the voltage between the earth of the protected area (e.g. all the sockets and pipes in the house) and "true" earth (the sheath of the incoming supply cable or an earth rod). When there is sufficient leakage current the ELCB will trip, disconnecting the circuits protected by it. It then has to be reset manually.

Voltage operated devices have the disadvantage that they can only detect leakage to the earth circuit that passes through them. Thus, they will not detect current passing through the body to the ground when using equipment outdoors, or to current passing through the body to plumbing if it is connected to the ground and therefore cannot be included in the protection circuit. They are now only used when the house is supplied by what is known as a "TT" system where a Protective Earth Conductor is not supplied by the electricity supply company and the house relies on a local Earth Electrode buried in the ground. Even where TT systems are used, an RCD is generally now preferred to an ELCB.

Here is a more detailed diagram of a traditional UK final ring circuit:

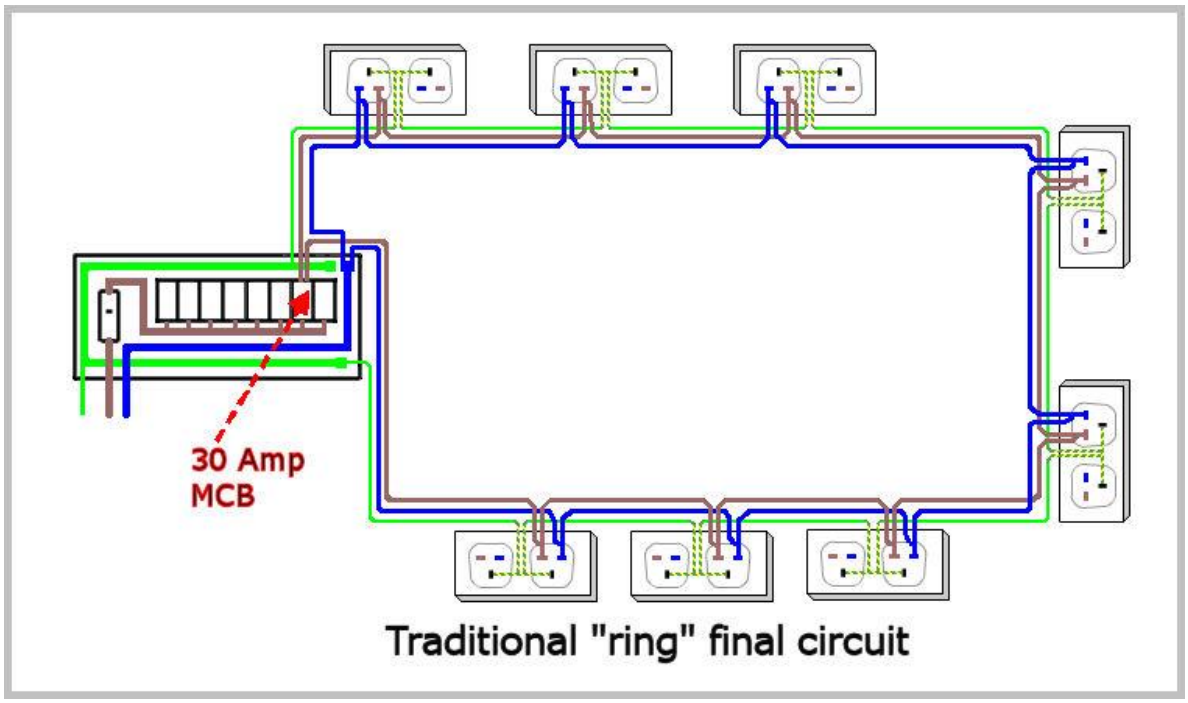

An alternative for electrical designers and electricians who insist on "traditional ring final circuits" is the "folded ring". Two cables are taken together around the rooms, one connecting to the socket outlets and the other connecting to the final socket outlet to complete the loop. This ensures that magnetic fields are minimised.

Radial circuits have low emissions of magnetic fields. It is often possible to convert an existing "ring" final circuit into one long radial circuit without major rewiring by removing one end connection and lowering the value of the protective device to 20 amps. In other cases it is possible to break the "ring" near its middle and, likewise, protect the two new circuits with either one or two 20 amp circuit-breakers depending on the expected electrical loading. 2 x 20A radial circuits provides for more load than the original ring final circuit.

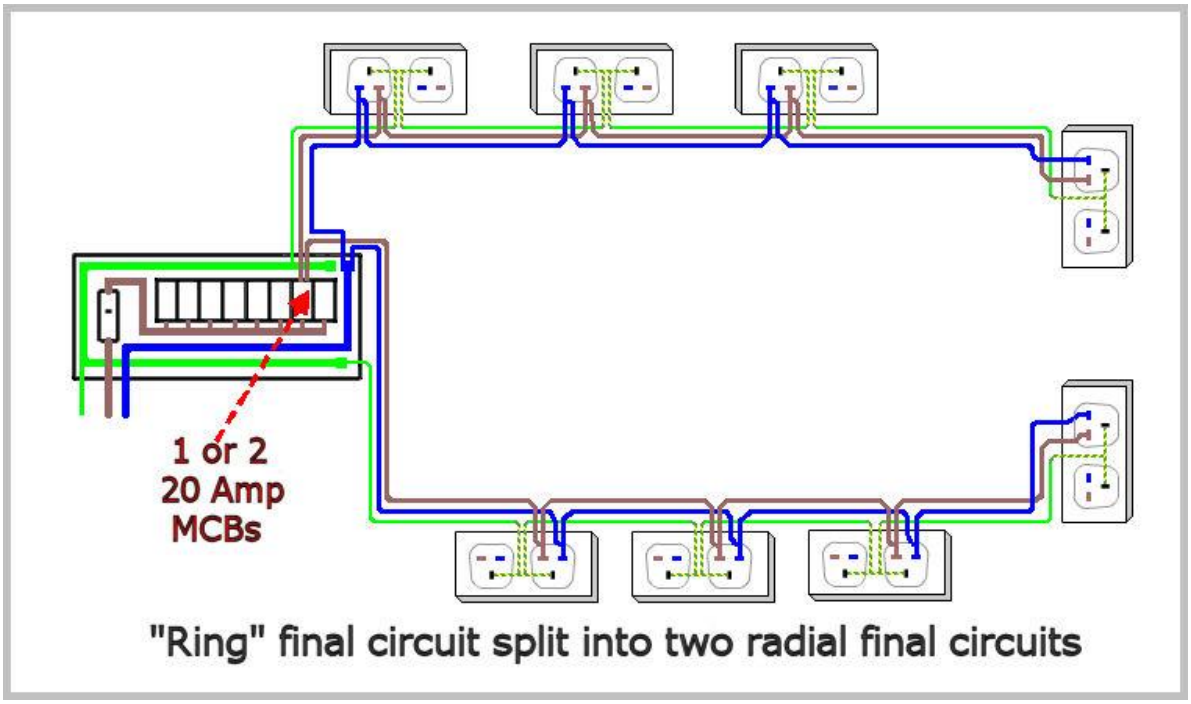

If a Residual Current protective Device (RCD) is used, any significant imbalance in Line & Neutral currents (i.e. any Net currents, which will almost always raise magnetic field levels) will cause the circuit to trip out and indicate a fault. RCDs are usually double-pole devices that switch both the "line" and "neutral" conductors. They can cause unnecessary circuit trips when some high loads are suddenly applied to the circuit, especially if these are highly inductive or capacitive loads. An RCD can be combined with an over-current protective device (MCB) in one unit and it is then known as an RCBO.

It is now a legal requirement that any (newly wired) sockets that might be connected to an extension cable to be used outside (i.e. if they are close to a garden window) must be protected by and RCD or RCBO.

An earthed metal conduit system (with cables or insulated wires in metal pipes), with radial final circuits will always produce the lowest electric and magnetic fields. The earthed metal pipes completely screen the electric field but, generally, have little effect on the magnetic field.

Another common cause of high magnetic fields comes from poorly laid-out lighting wiring. When possible, Phase (Live) and Neutral conductors should always be run together, keeping the "go" and "return" currents together in the same cables. To minimise magnetic fields, both Live and Neutral should be taken to each luminaire (light) and then the Live take to-and-from each switch as a twin and earth cable. The Live and Neutral conductors should always be connected to the same circuit from the consumer box and should never be connected between different circuits.

It is not uncommon to find two-way switched lighting circuits that, incorrectly, interconnect different circuits. This is against the requirements of BS7671. It is important that such circuits are fed from only one Live and are kept with their own Neutral; special 3 core + earth cable (easily available) is required to do this satisfactorily.

Electric Fields

Electric fields are present all the time the home circuits are connected to the mains and not just when current flows. A common cause of elevated electric fields is from the wiring of lighting circuits. It is not always obvious that these are the source, and care needs to be taken interpreting electric field readings taken with hand-held meters.

To track down the source it is worth referencing the meter to a known good electrical earth - it can then be used to pinpoint the live sources. Otherwise it is easy to become confused as electric fields can travel through conducting bodies (including people) and then return to a nearby earth - such as a radiator. It is not uncommon to obtain apparently high electric field readings from a radiator, when the source of the field is actually below the floor and the radiator is acting as the return Earth, with the circuit connection being supplied by the person holding the meter.

Electric fields are produced by a conductor having a potential (voltage) on it with respect to earth, and an earthed metal conduit or screened cable system effectively provides an electrical screen around all such conductors.

The metal mountings for halogen lights should be earthed - this will significantly reduce the electric fields. Ideally, one side of the secondary of the low-voltage transformer should also be earthed, but this is not always possible with electronic low-voltage adapters that are often supplied nowadays. Metal radiators are normally earthed through the legally required earth bonding to the metal water pipes. If plastic pipes are used, it is still recommended that most metal radiators are earthed. This will require an earthing lead to the nearest mains electricity safety earth.

Mineral insulated cables (e.g. Pyrotenax) are screened by their metal outer covering, but are expensive to install. "Armoured" (steel wire screened) cables also emit very little in the way of electric or magnetic fields but are not suitable for general wiring.

NOTE: **There is a specific British Standard screened cable intended for fixed wiring installations. The standard is BS 8436:2004, Electric cables.** 300/500 V screened electric cables having low emission of smoke and corrosive gases when affected by fire. Screened cable to BS 8436:2004 is fully approved for domestic building installations. The soft skin fire cables described below are not intended for this application, although they are satisfactory and may legally be used to reduce electric fields. The other cables, described below, are approved (to BS 7629-1) for installations in the UK, but not specifically for residential installations. They are quite adequate (and maybe better for screening) but a "Part-P" electrical inspector may query their use. BASEC state that they **are** legal and suitable!

Most "FP200" type cables use a solid aluminium or copper screening sheath, however some fireproof cables use a (permitted) polyester screening/fire-protection tape that is not very electrically conductive and will not provide good electric field screening. The wires in the cores are identical for BS 7629-1 and BS 8436. The BS 8436 cable has the wires loose inside a strong circular aluminium circular screen which then has a PVC sheath bonded on to it. The 7629-1 cable has the screening foil tightly wound around the inner wires and then the outer sheath is extruded over the top leaving virtually no internal air spaces at all.

We recommend 'Prysmian FP200 Gold' and also 'Noburn Platinum' fire resistant cable as both have proper metal aluminium earthing shields inside the cable around the wires. Both are very

easy to work with (easier than standard twin and earth unscreened cable). No special glands are needed and the outer is very easy to cut round and strip off the inner wires.

Please note that FP200 Gold is a Prysmian registered trade mark product, which complies with BS7629. It should not be used as a generic term for other manufacturer's products, especially as thicknesses and materials are frequently different and may have different characteristics. The above two cable types are fully compliant with BS7629-1 and are BASEC and LPCB approved.

In addition to approvals to BS7629-1 and BS6387 Category CWZ these cables have received BASEC and LPCB approval to BS5839-1:2002 for 'standard' applications. If you require a cable to purely reduce the electric field, and this cable is installed such that it is not required to meet clause 522.6.6, then these cables can be used. "By choice" you should use white (or black) sheathed cable to distinguish it from red alarm cables, but if you use the red cables for general purposes that should be clearly stated next to every consumer/distribution box/panel.

Although the screened cables are considerably dearer, the actual cost of the cable is only a relatively small part of the re-wire costs. Labour is usually by far the largest element. You should be able to get the cables locally, but if not these supply them. TLC will supply shorter cut lengths.

FP200:

http://www.screwfix.com/p/prysmian-fp200-gold-2-core-white-1-5mm-100m-fire-protected-cable/86537

http://www.screwfix.com/p/prysmian-fp200-gold-2-core-white-2-5mm-100m-fire-protected-cable/52629

Noburn cables:

http://www.tlc-direct.co.uk/Main_Index/Cable_Index/Firetuf/index.html

http://www.protectingpeople.co.uk/fire/performance_cable/noburn_platinum/index.htm

PYROTENAX Multi-Plus fire resistant cable

This is another, dearer and stronger cableMulti-Plus is a multi-purpose screened and fire-proof wiring cable system from Tyco.

MultiPlus is a new generation of high performance cables which has been specifically developed to meet the ever changing needs of the modern building services installation. MultiPlus is a multi-purpose, simple to install, one step cable system. This is available at higher ratings (up to 6mm^2)

http://www.tycothermal.com

There is also suitable, reasonably priced, screened flexible cable now available (types CY and SY), intended for eliminating electrical interference in industrial and commercial use. The braided screen is electrically separate from the insulated green/yellow earth conductor and they need to be connected at every junction point.

This can be used for flexible cords but should not really be used for rewiring a house.

Demand Switches

"Demand switches" can be used to minimise electric fields from circuits which are not actually supplying power. A Demand Switch is an electronically controlled mechanical circuit breaker (MCB) that replaces the 230 volts AC with a low or a DC voltage that is then used to sense when a switch is closed, when the 230 volts AC is automatically re-connected to the circuit. These can be fitted in consumer units and wired in series with the circuit-breaker or fuse. They are not needed if metal conduit or screened cables are used in the installation, but can otherwise be useful for remedial electric field reduction.

To reduce electric fields in the home, it really is a much better long-term solution to rewire using screened cable. However, there are times where this is just too much work and expense and fitting a few demand switches is an easier and cost-effective solution.

It is usually necessary to install another consumer unit next to the existing one to take the demand switches. It is often easiest to have all the Demand Switches in the new consumer unit and keep the MCBs and RCDs in the existing one. The demand switches are fitted after the MCBs before the cables go off to the lights or to the power sockets. Demand switches do not offer overload protection.

External 'faults' in the supply that can cause high magnetic fields

The Neutral conductor is connected to Earth at the local electricity substations and, with Protective Multiple Earthing (PME), at regular intervals along the low-voltage electricity distribution system in the locality. This can give rise elevated magnetic field levels, but it is difficult to get the electricity company to do anything about it as the levels are below the ICNIRP guidance of 100 µT and the electricity supply still seems to work correctly for users.

Generally, if an Earth facility is provided by the local electricity distribution network operator (DNO), the consumer's Earthing conductor is either connected to the neutral or the cable sheath/armour. **Neutral and Earth must not be connected together anywhere else in the building.**

An undetected Neutral to Earth short–circuit can cause a high magnetic field within a building. Insulation tests on the Live and Neutral conductors of each circuit will detect such a fault. Insulation tests must officially be performed when any wiring changes are made (though they often aren't as it is extra hassle for the electrician) and, ideally, at suitable periodic intervals when the building wiring is checked. A Neutral to Earth short-circuit contravenes the requirements of the IEE Wiring Regulations.

One problem that causes high magnetic fields due to external distribution problems, but one that can be dealt with by the building owner, are "stray" net currents flowing on incoming metal gas and water pipes. These "stray" currents enter, or leave, the building and then transfer via the required electrical safety bonding to the electrical safety earth. The currents are easily detected by either holding a magnetic field meter next to the pipes where they enter the building (the fields will rise as you get closer to the pipe) or by using a clamp-ammeter around the pipe. Zero current should be flowing in the pipe. If there is more than about 10 or 20 mA (and it can be as high as several amps), then a short section of suitable plastic pipe should be inserted into the metal pipe. This will break the circuit and stop the current flowing.

NOTE ! : Internal metal pipework must still be correctly Earth-bonded as per BS7671. Also, the incoming pipe should be isolated as near the ground as possible and any exposed pipe covered

with insulating tape or sleeving as, under fault conditions, it would be possible for a significant voltage to exist between the house Electrical Safety Earth and the incoming pipe tail that could give rise to a voltage shock hazard.

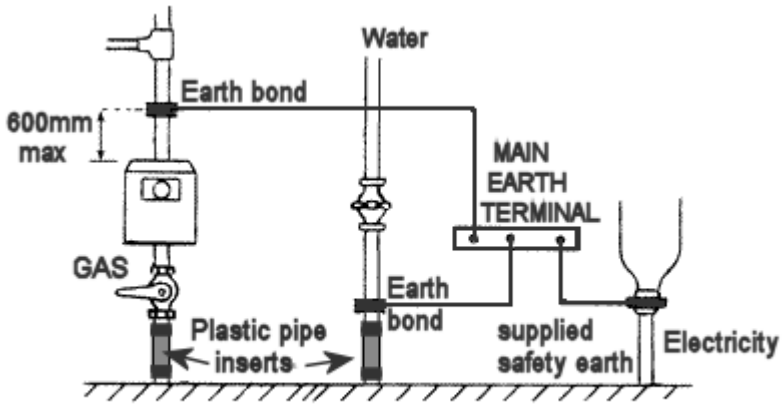

Reducing Net Currents by isolating incoming metal pipes

IMPORTANT NOTES:

Remember that electricity can be lethal, and all wiring installations should be checked by a competent person with suitable test equipment to ensure that they are safe and that they fully comply with the UK BS7671 Requirements for Electrical Installations.

The Building Regulations (Part P) set out the latest applicable requirements. It is not worth taking any risks with electrical safety in the course of trying to reduce EMFs – in the UK, about 20 people are killed by accidental electrocution each year.

We are aware that many trades people are set in their normal ways of doing things. Some of the techniques described in this article will be different from what they are used to doing.

We believe that the techniques and materials described in this leaflet will provide installations that comply with the latest thinking and requirements of BS7671.

It is now illegal for unqualified people to undertake major electrical work without formal independent third-party inspection and test.

Meters that measure both electric and magnetic fields can be hired or bought from EMFields http://www.emfields-solutions.com/detectors/overview.asp

This leaflet was mostly written in 2007 and revised in 2009 and in September 2012
by Alasdair Philips, BSc(Eng), DAgE, MIAgE, MInstPhys, for Powerwatch and EMFIELDS.

Wiring in homes - extract from SAGE Report

This is extracted from the First Report (July 2007) of the UK Department of Health's SAGE working group on ELF EMFs.

3.1 Introduction

In all homes, the internal wiring makes some contribution to the electric and magnetic fields inside the home. For magnetic fields, however, normal, correctly installed home wiring is rarely a significant source of fields, because "go" and "return" currents are usually balanced and close together, resulting in a large degree of cancellation. Home wiring becomes a significant source of magnetic fields only if one of a number of specific features is present (described in more detail in Supporting Paper S9):

- A ring-main power circuit where, because of an interrupted conductor or a high-impedance joint, the phase and neutral currents split in different proportions round the two arms of the ring, resulting in unbalanced currents.
- A circuit, usually a two-way switched lighting circuit, where the phase and neutral currents flow different ways round a loop
- An accidental connection between neutral and earth within the wiring which allows some of the neutral current to return via earth and creates an unbalanced current
- Loops of current in the vicinity of the electricity meter and the consumer unit
- The electricity meter itself; traditional rotating disc meters produce relatively high magnetic fields, which fall off over a metre or so but which can be a significant source of exposure eg if a child sleeps with their head close to the meter, including on the other side of a wall.

The best data available in the UK[1] suggest that, of the 0.4% of homes (80,000 homes) where fields are greater than 0.4 μT, perhaps a quarter or 0.1% (20,000 homes) are due to house wiring.

For electric fields, external sources of field are less significant inside the home because they are screened by the building structure. Wiring in the home is therefore a more significant source of field than for magnetic fields. In addition, the cancellation between phase and neutral is not as effective. Electric fields are produced by all wiring containing a live conductor, unless the wiring is contained in a metal conduit or has a screen in the sheath, and are present all the time.

For blocks of flats and apartments, we believe our analysis and conclusions about internal wiring still apply. In addition, however, fields can arise from the way electricity is distributed to the flats within a building. These issues will be considered by the next SAGE Working Group, on Distribution, discussed in Section 1.3.

3.2 Options for reducing fields from wiring in the home

We looked at a long list of possible options for reducing exposures, so as to be sure of covering everything relevant, including:

Primarily to reduce magnetic fields

- Changing ring power circuits to radial circuits
- Inserting plastic sections in metal services such as gas and water pipes
- Keep "go" and "return" currents together at all times
- Protect whole installation with a residual current device (RCD, see Supporting Paper S9)

[1] http://www.hpa.org.uk/radiation/publications/hpa_rpd_reports/2005/hpa_rpd_005.htm

Primarily to reduce electric fields

- Placing all wiring in metal conduits
- Use all-metal accessories and mounting boxes
- Use cables with a screen
- String-pull or remote control light switches
- Locate sockets away from the bed
- Apply earthed metal screening tape over cables in walls and ceilings
- Use demand switches to disconnect voltage when circuit not in use

For both electric and magnetic fields

- Site the meter and consumer unit appropriately
- Use extra-low-voltage circuits in homes
- Use DC circuits in homes

To allow people to know about and reduce their exposures by their own actions

- Labelling of meter and installed equipment
- Requiring a document in each home recording the fields

We assessed these options against the following criteria:

- Safety
- Effectiveness at reducing fields
- Level of technical difficulty
- Complexity to introduce
- Cost

3.3 Best available options

For wiring in homes, there is no single "best" option, and instead we have identified the following as best available package of options:

To reduce magnetic fields:

- Wire power circuits as radial circuits instead of ring circuits
- Ensure that "go" and "return" currents are kept physically close together at all time, particularly in relation to two-way switching of lights and to the layout of underfloor heating cables
- Protect the whole electrical installation with a residual current device (RCD)
- Use electronic electricity meters rather than rotating-disc meters
- Keep meter tails physically close together
- Position consumer units (and rotating-disc meters) away from high-occupancy areas

To reduce electric fields:

- Wire homes using cable which has a screen within the overall sheath

We have examined these options for their consequences, including safety. None have any serious problems, and specifically, we do not believe that any are less safe than at present, and some bring safety advantages.

These options could be applied to varying degrees, which we summarise in Table 3.1.

	Precautionary Action	Implementation	Characteristics
Range of options with increasing precaution	Do nothing; no change to existing situation	No legislation, regulation or voluntary codes needed	☐ No cost ☐ Likely continuing dispute ☐ Potential political fallout and continuing criticism ☐ No reduction in exposure levels
	Provide information	No legislation or regulation needed	☐ Demonstrates acceptance of desirability of reducing exposures ☐ Empowers people to make a choice ☐ Could either allay or aggravate public concern ☐ Low cost ☐ Does nothing directly to reduce exposures
	Voluntary testing of homes for high fields. Remedial action paid for by householder.	No legislation or regulation needed. Agreed procedures and training for tests.	☐ Empowers people to make a choice ☐ Take up may be low (based on radon experience)
	New wiring practices for all new homes	IET guidance to electricians	☐ Reduces exposures in new homes and when homes rewired ☐ Additional cost
		Changes to Wiring Regulations or Building Regulations	
	Mandatory testing of existing homes and remediation	Building Regulations or other regulation or secondary legislation	☐ More effective at reducing high fields now ☐ Considerable extra cost ☐ Training for electricians

(shaded areas show SAGE's preferred options)

3.4 Conclusions

As discussed in Section 2.1, our primary focus is to reduce magnetic fields, because it is these which are most strongly associated with childhood leukaemia. For electric fields, we consider more research would be desirable. To apply our package of options to reduce magnetic fields to a new home or when completely rewiring an existing home would, we estimate, cost an additional £20. The benefit in terms of reduced cases of childhood leukaemia ("WHO/HPA"), even assuming that magnetic fields are causal, we estimate as £1 per new home (the details of how we derived these figures are in Supporting Paper S10). Considering other adverse health effects as well as childhood leukaemia ("California", as discussed in Section 1.1) would strengthen the case for these options, but amongst the stakeholders within SAGE we do not have agreement on whether this is appropriate. Therefore, we do not have a clear justification for this package of options in health cost-benefit terms. However, in view of the small absolute cost per home, particularly when seen in the context of the total cost of building a new home, and the fact that there is a trend for some

of these options to happen anyway for other reasons, we nonetheless recommend that this package of options should be implemented.

Therefore we recommend that:

- **The IET should issue guidance to electricians (contained either in the On Site Guide or as a separate Guidance Note) recommending the change to radial power circuits, keeping "go" and "return" currents together, and keeping meter tails together. The IET Wiring Regulations Policy Committee should consider this, and the Government representatives on this committee should take responsibility for monitoring acceptance and implementation of this recommendation. We considered the alternative of recommending a change to BS7671 (the "wiring regulations"), but felt that guidance to electricians would be just as effective and easier to achieve.**
- **BS7671 should be changed to require RCDs for the whole installation. We understand this is likely to happen with the next revision in January 2008 anyway, but if it does not, then the IET should implement it as guidance for electricians as for the previous options.**
- **Use of rotating-disc electricity meters should be phased out. There is already a strong trend to this and 95% of meters currently being installed in new properties, and to meet re-certification requirement, are electronic. However, it is not clear how this can be made mandatory.**
- **Alternatively, depending on how effectively a move to electronic meters can occur, CLG (formerly ODPM) should modify the Building Regulations to specify that electricity meters and consumer units for new homes should not be located close to high-occupancy areas.**

These measures would result in the package of options being applied to new homes and when rewiring is taking place anyway. We do not believe it is justifiable to require these options to be applied retrospectively in all homes. However, if a test shows that high-magnetic fields are present in a home due to some feature of the wiring, we believe it is sensible to take actions to reduce the field, using whichever of these options is appropriate to the source of field that has been identified. Taking such action would also be justified in cost-benefit terms as shown in Supporting Paper S10.

We therefore recommend:

- **That where high magnetic fields as a result of house wiring are identified in an existing home, the source of those fields should be removed or remediated.**
- **To identify high fields in existing homes, it should be an option that a simple measurement of magnetic fields be performed when either a Periodic Inspection of the house wiring or a Building Survey in connection with the sale of the home is being performed.**

This would require at least some electricians and surveyors to be suitably trained and equipped. If this test identified high fields, identification of the source might require a separate visit by a more highly trained person. We describe the tests we envisage in Supporting Paper S11. In due course, in the light of

experience, a separate decision could be made as to whether to make this test mandatory, perhaps as part of the home buyer's report.

Occasionally, high fields in one home arise from a source in the neighbouring home. We recognise that the options available to the person affected may be limited in this situation.

In line with Supporting Paper S3, we consider that the measures we propose for homes should also be applied to schools, similarly applying to new wiring and available as an option for existing wiring, though we recognise this places an extra burden on school budgets.

For electric fields, there is a less strong case for reduction, and we do not recommend that our option should be implemented routinely. Rather, it should be available to those householders or developers who wish to use it.

Our option for reducing electric fields requires a type of cable (conventional twin-and-earth but with a screen inside the sheath) that is available at present only at a considerably higher price than normal cable; we recommend that a cheaper version should be developed. In the interim, we give other methods of reducing electric fields which householders or developers can use if they wish, in Supporting Paper S12.

The above section (3) is extracted from the First Report (July 2007) of the UK Department of Health's SAGE working group on ELF EMFs.

The Stakeholder Advisory Group on ELF EMFs (SAGE) was set up by the Department of Health to explore the implications and to make practical recommendations for a precautionary approach to power frequency electric and magnetic fields. It has now produced its first report, and more information is available from the Department of Health website.

http://www.dh.gov.uk/en/Publichealth/Healthprotection/DH_4089500

The main first report and the supporting papers are worth downloading and reading. Some specifically relate to house wiring.

his was followed by a "Cross-Party Inquiry into Childhood Leukaemia and Extremely Low Frequency Electric and Magnetic Fields (ELF EMF)", which was set up to allow the five Members to consider in detail the evidence for an association between Electric and Magnetic Fields (EMF) from High Voltage Overhead Transmission Lines (HVOTL) and an increased risk of childhood leukaemia and determine what should be done. Their findings and recommendations can be found on the ePolitix.com website.

http://www.epolitix.com/EN/Forums/CPIELFEMF